Line laser, green, 532 nm, 90°, 15 mW

MLD532-15-5(20x80)
Order Number: 70101294

Main Parameters (*)	min	typ	max	Unit
Wavelength		532		nm
Optical Output Power		15		mW
Operating Voltage	4.5	5	5.5	V DC
Operating Current		350		mA
Operating Temperature	15		30	°C
Storage Temperature	-40		80	°C

Main Data

Warranty	1 years

Technical Parameters

Lifetime	> 5,000 h
RoHS	yes

Optical Parameters

Beam Shape	Line
Laser Class	2M
Divergence	D - 0.5 mrad
Fan Angle	90°
Line Thickness	<1.5mm@5m
Operating Distance	5 m
Optics	glass lens AR coated
Beam Mode	TEM00
Laser technology	YVO4+KTP
Stability	+/- 20% @ 15-30°C
Focus	fixed (5.0m)
Warm up time	< 15 min

Electrical Parameters

Potential of Housing	isolated
Max. Mod. Frequency	10 kHz

Mechanical Parameters

Size	Ø20x80 mm
Material	aluminium
Cable length	100 mm
Wire type	26AWG, 0,14mm²
Output Aperture	5 mm
Housing Color	black
Weight	55 g

(*) Over the complete operating temperature range

Features

- Uniform illumination
- Uniform line thickness
- High Power
- Laser Class 2M
- Modulated

Picture

Cable color

Ground		black	GND
Positive		red	4.5 - 5.5, typ 5 V DC
Modulation		yellow	10 kHz

Drawing

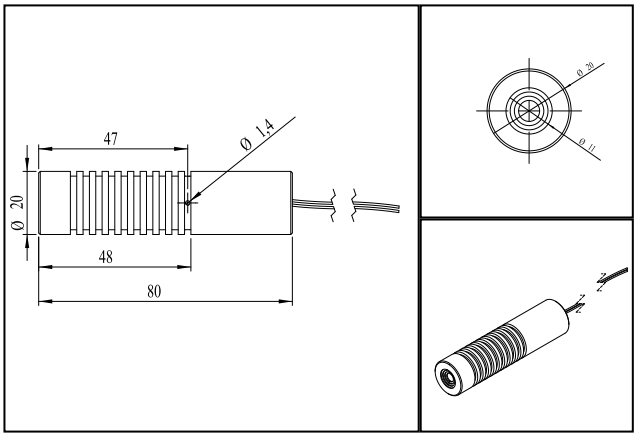

Saftey Label

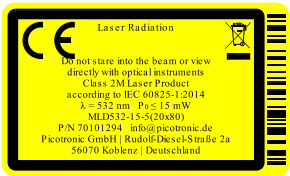

Valid Revision

5 | 23-JUL-2020

Pico Group® member

Picotronic GmbH
Rudolf-Diesel-Str. 2a
56070 Koblenz
Germany

Geschäftsführer
David Heckner

FON +49(0)261-983 497-0
FAX +49(0)261-983 497-10
www.picotronic.de
info@picotronic.de

Sparkasse Koblenz
BIC/IBAN MALADE51KOB
DE41 5705 0120 0000 2110 03

Postbank Stuttgart
BIC/IBAN PBNKDEFF
DE41 6001 0070 0077 0787 04

USt-IdNr. DE814473445
Amtsgericht Koblenz HRB 20026
WEEE-Reg.-Nr. DE85231360