Line laser, green, 532 nm, 90°, 5 mW

LFL532-5-3(12x60)
Order Number: 70103380

Main Parameters (*)	min	typ	max	Unit
Wavelength		532		nm
Optical Output Power		5		mW
Operating Voltage	2.7	3	3.3	V DC
Operating Current	100	200	300	mA
Operating Temperature	15		30	°C
Storage Temperature	-40		80	°C

Main Data

Warranty	1 years

Technical Parameters

Lifetime	> 5,000 h
RoHS	yes

Optical Parameters

Beam Shape	Line
Laser Class	1
Divergence	D - 0.5 mrad
Fan Angle	90°
Line Thickness	<2mm@3m
Operating Distance	3 m
Optics	glass lens AR coated
Beam Mode	TEM00
Laser technology	YVO4+KTP
Stability	+/- 10% @ 15-30°C
Focus	fixed (3000mm)
Warm up time	< 15 min

Electrical Parameters

Potential of Housing	isolated
Power Supply	Power Supply with stripped/tinned wires, Output: 3.3V DC, Input: 100-240V AC, 50-60Hz, Output Power: 3.3W max.

Mechanical Parameters

Size	Ø12x60 mm
Material	aluminium
Cable length	100 mm
Wire type	26AWG, 0,14mm²
Output Aperture	3 mm
Housing Color	black
Weight	24 g
Stripping of wire	5 mm

(*) Over the complete operating temperature range

Picture

Cable color

Ground		blue	GND
Positive		red	2.7 - 3.3, typ 3 V DC

Drawing

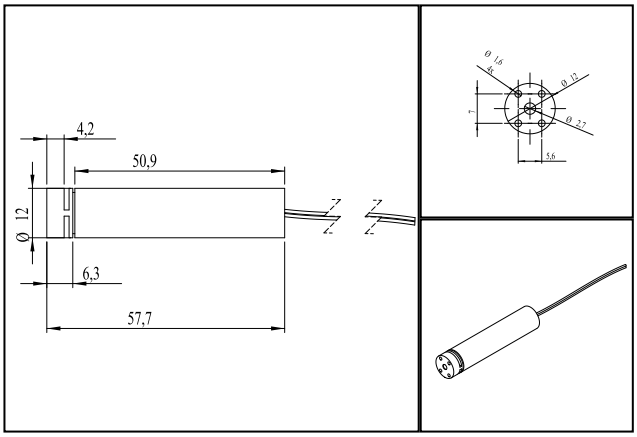

Saftey Label

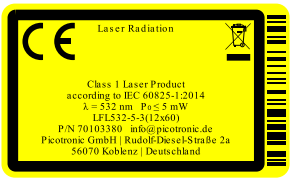

Valid Revision

28 | 18-SEP-2024

Pico Group® member

Picotronic GmbH
Rudolf-Diesel-Str. 2a
56070 Koblenz
Germany

Geschäftsführer
David Heckner

FON +49(0)261-983 497-50
FAX +49(0)261-983 497-55
www.laserfuchs.de
info@picotronic.de

Sparkasse Koblenz
BIC/IBAN MALADE51KOB
DE41 5705 0120 0000 2110 03

Postbank Stuttgart
BIC/IBAN PBNKDEFF
DE41 6001 0070 0077 0787 04

USt-IdNr. DE814473445
Amtsgericht Koblenz HRB 20026
WEEE-Reg.-Nr. DE85231360