Dot laser, infrared, 780 nm, 5 mW

LFD780-5-3(8x23)
Order Number: 70103908

Main Parameters (*)	min	typ	max	Unit
Wavelength		780		nm
Optical Diode Power		5		mW
Operating Voltage	2.3	3	3.3	V DC
Operating Current	15	25	55	mA
Operating Temperature	-20		40	°C
Storage Temperature	-40		80	°C

Main Data

Warranty	1 years

Technical Parameters

Lifetime	> 3,000 h
RoHS	yes

Optical Parameters

Beam Shape	Dot
Laser Class	3R
Divergence	G - 0.8 mrad
Beam Diameter	3.5 mm
Size of Laserdot	<4..6mm@5m
Operating Distance	10 m
Optics	acryl lense
Laser technology	diode
Focus	collimated

Electrical Parameters

Potential of Housing	VDD(+)
Power Supply	LFNT-3

Mechanical Parameters

Size	Ø8x23 mm
Material	Brass
Cable length	100 mm
Wire type	26AWG, 0,14mm²
Output Aperture	3.5 mm
Weight	3.5 g

(*) Over the complete operating temperature range

Picture

Cable color

Ground		white	GND
Positive		red	2.3 - 3.3, typ 3 V DC

Drawing

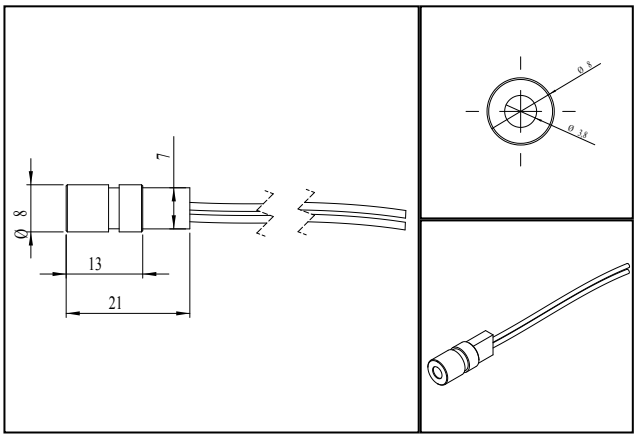

Saftey Label

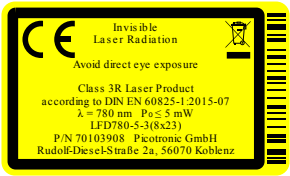

Valid Revision

8 | 26-OCT-2023

Pico Group® member

Picotronic GmbH
Rudolf-Diesel-Str. 2a
56070 Koblenz
Germany

Geschäftsführer
David Heckner

FON +49(0)261-983 497-50
FAX +49(0)261-983 497-55
www.laserfuchs.de
info@picotronic.de

Sparkasse Koblenz
BIC/IBAN MALADE51KOB
DE41 5705 0120 0000 2110 03

Postbank Stuttgart
BIC/IBAN PBNKDEFF
DE41 6001 0070 0077 0787 04

USt-IdNr. DE814473445
Amtsgericht Koblenz HRB 20026
WEEE-Reg.-Nr. DE85231360