Line laser, green, 520 nm, 90 °, 15 mW

LD520-15-24(20x135)-M12
Order Number: 70121711

Main Parameters (*)	min	typ	max	Unit
Wavelength	515	520	525	nm
Optical Output Power	13	15	20	mW
Operating Voltage	21.6	24	26.4	V DC
Operating Current	40	75	115	mA
Operating Temperature	-10		60	°C
Storage Temperature	-40		80	°C

Main Data

Warranty	1 years

Technical Parameters

Lifetime	> 10,000 h
RoHS	yes

Optical Parameters

Beam Shape	Line
Laser Class	2M
Divergence	D - 0.5 mrad
Fan Angle	90 °
Line Thickness	adjustable
Operating Distance	15 m
Optics	glass lens AR coated
Laser technology	Single Mode Diode
Stability	+/- 3% @ -10-50°C
Protection Lens	yes
Focus	adjustable

Electrical Parameters

Potential of Housing	isolated
ESD Protection	IEC 61000-4-2
Connector	CON-M12
Power Supply	LFNT-24-C-M12

Mechanical Parameters

Size	Ø20x135 mm
Material	Stainless Steel
Output Aperture	16 mm
Housing Color	green
Weight	350 g
Protection Class	IP 64

(*) Over the complete operating temperature range

Features

- Stainless steel for industrial applications
- Protection Class (IP64)
- Adjustable line thickness
- M12 industrial connector
- Protection lens

Picture

Drawing

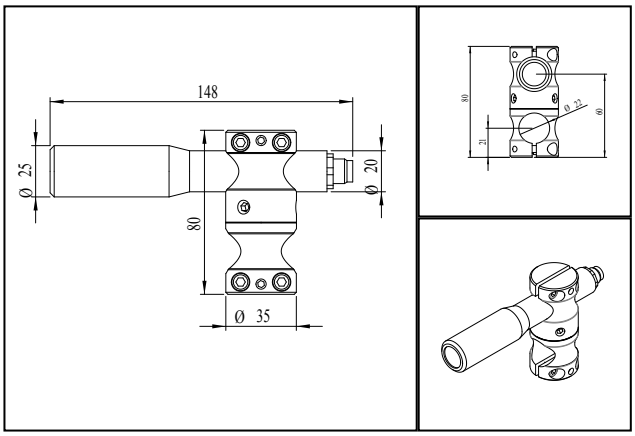

Saftey Label

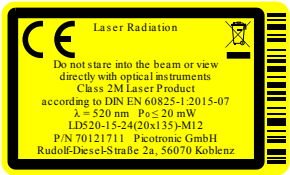

Valid Revision

| 07-AUG-2023

Pico Group® member

Picotronic GmbH
Rudolf-Diesel-Str. 2a
56070 Koblenz
Germany

Geschäftsführer
David Heckner

FON +49(0)261-983 497-0
FAX +49(0)261-983 497-10
www.picotronic.de
info@picotronic.de

Sparkasse Koblenz
BIC/IBAN MALADE51KOB
DE41 5705 0120 0000 2110 03

Postbank Stuttgart
BIC/IBAN PBNKDEFF
DE41 6001 0070 0077 0787 04

USt-IdNr. DE814473445
Amtsgericht Koblenz HRB 20026
WEEE-Reg.-Nr. DE85231360