Dot laser, infrared, 830 nm, 0.4 mW

IMD830-0.4-5(14x30)-10kHz
Order Number: 70120202

Main Parameters (*)	min	typ	max	Unit
Wavelength		830		nm
Optical Output Power		0.4		mW
Operating Voltage	4.5	5	5.5	V DC
Operating Current	7	15	30	mA
Operating Temperature	-20		50	°C
Storage Temperature	-40		80	°C

Main Data

Warranty	1 years

Technical Parameters

Lifetime	> 5,000 h
RoHS	yes

Optical Parameters

Beam Shape	Dot
Laser Class	1
Divergence	D - 0.5 mrad
Beam Diameter	3 mm
Operating Distance	10 m
Optics	glass lens AR coated
Laser technology	Single Mode Diode
Focus	collimated

Electrical Parameters

Potential of Housing	isolated
Power Supply	LFNT-5

Mechanical Parameters

Size	Ø14x30 mm
Material	aluminium
Cable length	100 mm
Wire type	Belden, Typ 1007, 26AWG
Output Aperture	3 mm
Housing Color	black
Weight	18 g
Stripping of wire	5 mm

(*) Over the complete operating temperature range

Features

- Fixed focus
- Low power consumption
- Compact size
- Modulated 10kHz
- Glas lenses anti reflex coated
- Blinking with 10kHz

Picture

Cable color

Ground	black	GND
Positive	red	4.5 - 5.5, typ 5 V DC

Drawing

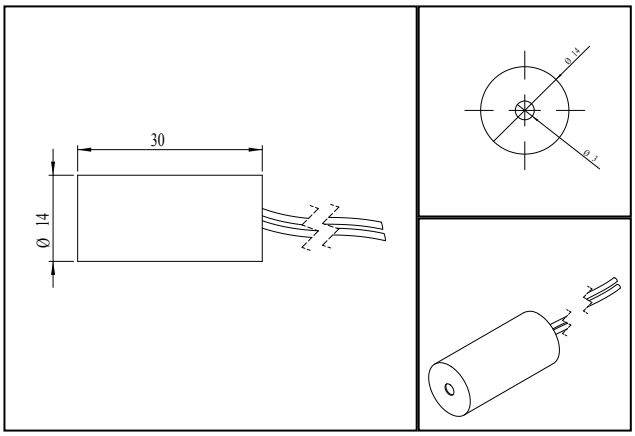

Saftey Label

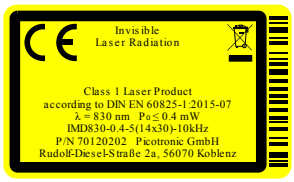

Valid Revision

| 10-FEB-2014

Pico Group® member

Picotronic GmbH
Rudolf-Diesel-Str. 2a
56070 Koblenz
Germany

Geschäftsführer
David Heckner

FON +49(0)261-983 497-0
FAX +49(0)261-983 497-10
www.picotronic.de
info@picotronic.de

Sparkasse Koblenz
BIC/IBAN MALADE51KOB
DE41 5705 0120 0000 2110 03

Postbank Stuttgart
BIC/IBAN PBNKDEFF
DE41 6001 0070 0077 0787 04

USt-IdNr. DE814473445
Amtsgericht Koblenz HRB 20026
WEEE-Reg.-Nr. DE85231360