Doe laser, red, 635 nm, 1 mW

DOE266-635-1-6(10x22)
Order Number: 70111996

Main Parameters (*)	min	typ	max	Unit
Wavelength		635		nm
Optical Diode Power		1		mW
Operating Voltage	3	5	6	V DC
Operating Current	20	30	45	mA
Operating Temperature	-20		50	°C
Storage Temperature	-40		80	°C

Main Data

Warranty	1 years

Technical Parameters

Lifetime	> 3,000 h
RoHS	yes

Optical Parameters

Beam Shape	DOE
Laser Class	2M
Divergence	H - 1.0 mrad
Optics	acryl lense
Laser technology	diode
Protection Lens	yes
Focus	fixed

Electrical Parameters

Potential of Housing	VDD(+)

Mechanical Parameters

Size	Ø10x22 mm
Material	Brass
Cable length	100 mm
Wire type	26AWG, 0,14mm²
Output Aperture	6 mm
Weight	8.5 g

DOE

Alpha	5 °
a	8.7 mm
Diameter (without holder)	8 mm
Width (without Holder)	1.2 mm
Material	PC

(*) Over the complete operating temperature range

Features

Picture

Cable color

Ground		black	GND
Positive		red	3 - 6, typ 5 V DC

Drawing

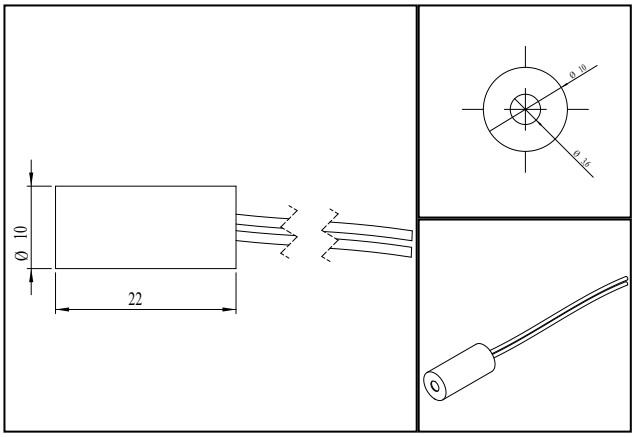

Saftey Label

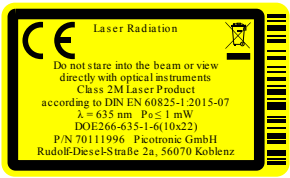

Valid Revision

1

Pico Group® member

Picotronic GmbH
Rudolf-Diesel-Str. 2a
56070 Koblenz
Germany

Geschäftsführer
David Heckner

FON +49(0)261-983 497-0
FAX +49(0)261-983 497-10
www.picotronic.de
info@picotronic.de

Sparkasse Koblenz
BIC/IBAN MALADE51KOB
DE41 5705 0120 0000 2110 03

Postbank Stuttgart
BIC/IBAN PBNKDEFF
DE41 6001 0070 0077 0787 04

USt-IdNr. DE814473445
Amtsgericht Koblenz HRB 20026
WEEE-Reg.-Nr. DE85231360