Dot laser, red, 650 nm, 0.4 mW

DI650-0.4-3(8x21)-AP
Order Number: 70121582

Main Parameters (*)	min	typ	max	Unit
Wavelength	640	650	660	nm
Optical Output Power	0.3	0.4	0.4	mW
Operating Voltage	2.7	3	3.3	V DC
Operating Current	10	18	30	mA
Operating Temperature	-20		50	°C
Storage Temperature	-40		80	°C

Main Data

Warranty	1 years

Technical Parameters

Lifetime	> 5,000 h
RoHS	yes

Optical Parameters

Beam Shape	Dot
Laser Class	1
Divergence	I - 1.5 mrad
Beam Diameter	2 mm
Size of Laserdot	<3..5mm@5m
Operating Distance	10 m
Optics	glass lens AR coated
Laser technology	Single Mode Diode
Axial Divergence	± 0.15 °
Focus	collimated

Electrical Parameters

Potential of Housing	isolated
Power Supply	LFNT-3

Mechanical Parameters

Size	Ø8x21 mm
Material	aluminium
Cable length	100 mm
Wire type	26AWG, 0,14mm²
Output Aperture	2.5 mm
Housing Color	silver
Weight	3 g

(*) Over the complete operating temperature range

Features

- Axial parallel
- Low power consumption
- Compact size
- Laser Class 1
- Operating Voltage 3 V DC

Picture

Cable color

Ground		blue	GND
Positive		red	2.7 - 3.3, typ 3 V DC

Drawing

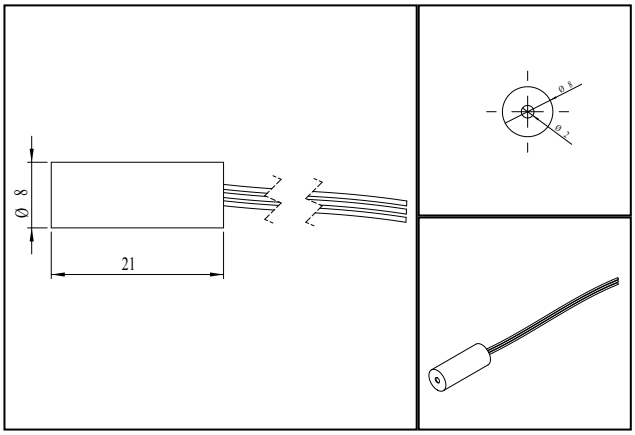

Saftey Label

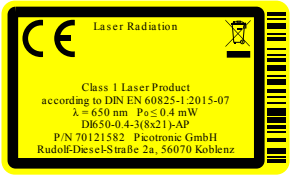

Valid Revision

| 31-AUG-2022

Pico Group® member

Picotronic GmbH
Rudolf-Diesel-Str. 2a
56070 Koblenz
Germany

Geschäftsführer
David Heckner

FON +49(0)261-983 497-0
FAX +49(0)261-983 497-10
www.picotronic.de
info@picotronic.de

Sparkasse Koblenz
BIC/IBAN MALADE51KOB
DE41 5705 0120 0000 2110 03

Postbank Stuttgart
BIC/IBAN PBNKDEFF
DE41 6001 0070 0077 0787 04

USt-IdNr. DE814473445
Amtsgericht Koblenz HRB 20026
WEEE-Reg.-Nr. DE85231360