Dot laser, red, 635 nm, 0.4 mW

DI635-0.4-3(8x21)
Order Number: 70104127

Main Parameters (*)	min	typ	max	Unit
Wavelength		635		nm
Optical Output Power		0.4	0.39	mW
Operating Voltage	2.4	3	3	V DC
Operating Current	15	35	55	mA
Operating Temperature	-20		50	°C
Storage Temperature	-40		80	°C

Main Data

Warranty	1 years

Technical Parameters

Lifetime	> 5,000 h
RoHS	yes

Optical Parameters

Beam Shape	Dot
Laser Class	1
Divergence	I - 1.5 mrad
Beam Diameter	2 mm
Size of Laserdot	<3..5mm@5m
Operating Distance	5 m
Optics	glass lens AR coated
Laser technology	diode
Focus	fixed (5.0m)

Electrical Parameters

Potential of Housing	isolated
Power Supply	LFNT-3

Mechanical Parameters

Size	Ø8x21 mm
Material	aluminium
Cable length	100 mm
Output Aperture	2 mm
Housing Color	black
Weight	3 g

(*) Over the complete operating temperature range

Features

- Operating Voltage 3 V DC
- For medical devices
- Fixed focus
- Compact size
- Laser Class 1

Picture

Cable color

Ground	green	GND
Positive	red	2.4 - 3, typ 3 V DC

Drawing

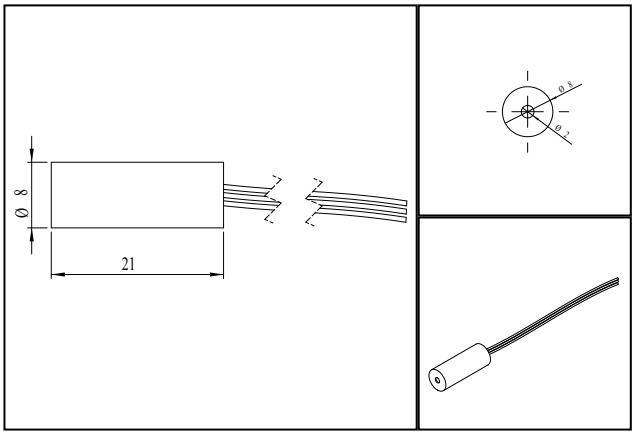

Saftey Label

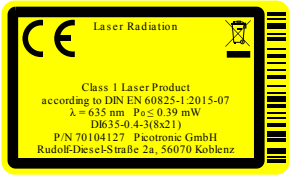

Valid Revision

8 | 01-JUL-2022

Pico Group® member

Picotronic GmbH
Rudolf-Diesel-Str. 2a
56070 Koblenz
Germany

Geschäftsführer
David Heckner

FON +49(0)261-983 497-0
FAX +49(0)261-983 497-10
www.picotronic.de
info@picotronic.de

Sparkasse Koblenz
BIC/IBAN MALADE51KOB
DE41 5705 0120 0000 2110 03

Postbank Stuttgart
BIC/IBAN PBNKDEFF
DE41 6001 0070 0077 0787 04

USt-IdNr. DE814473445
Amtsgericht Koblenz HRB 20026
WEEE-Reg.-Nr. DE85231360