Dot laser, infrared, 980 nm, 50 mW

DH980-50-3(22x65)
Order Number: 70102024

Main Parameters (*)	min	typ	max	Unit
Wavelength		980		nm
Optical Output Power	40	50	60	mW
Operating Voltage	2.7	3	3.3	V DC
Operating Current	30	60	90	mA
Operating Temperature	-20		50	°C
Storage Temperature	-40		80	°C

Main Data

Warranty	1 years

Technical Parameters

Lifetime	> 5,000 h
RoHS	yes

Optical Parameters

Beam Shape	Dot
Laser Class	3B
Divergence	H - 1.0 mrad
Size of Laserdot	adjustable
Operating Distance	50 m
Optics	glass lens AR coated
Laser technology	diode
Focus	adjustable

Electrical Parameters

Potential of Housing	isolated
Power Supply	Power Supply with stripped/tinned wires, Output: 3.3V DC, Input: 100-240V AC, 50-60Hz, Output Power: 3.3W max.

Mechanical Parameters

Size	Ø22x65 mm
Material	aluminium
Cable length	100 mm
Wire type	26AWG, 0,14mm²
Output Aperture	5 mm
Weight	50.5 g

(*) Over the complete operating temperature range

Features

- Glas lenses anti reflex coated
- Operating Voltage 3 V DC
- Laser Class 3B
- Adjustable focus
- Compact size

Picture

Cable color

Ground		black	GND
Positive		red	2.7 - 3.3, typ 3 V DC

Drawing

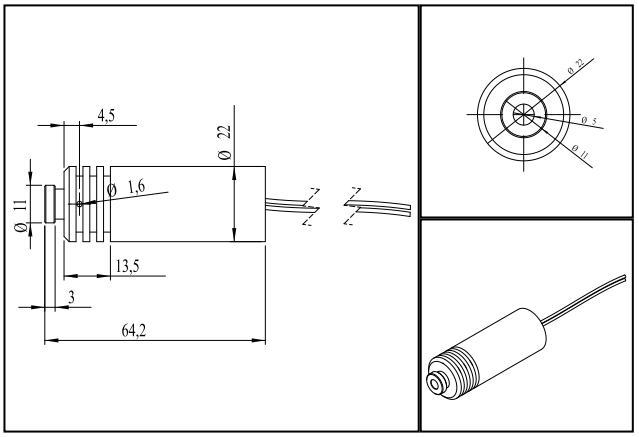

Saftey Label

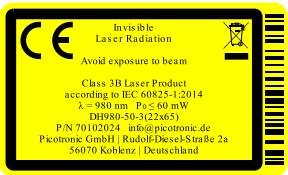

Valid Revision

0 | 12-OCT-2020

Pico Group® member

Picotronic GmbH
Rudolf-Diesel-Str. 2a
56070 Koblenz
Germany

Geschäftsführer
David Heckner

FON +49(0)261-983 497-0
FAX +49(0)261-983 497-10
www.picotronic.de
info@picotronic.de

Sparkasse Koblenz
BIC/IBAN MALADE51KOB
DE41 5705 0120 0000 2110 03

Postbank Stuttgart
BIC/IBAN PBNKDEFF
DE41 6001 0070 0077 0787 04

USt-IdNr. DE814473445
Amtsgericht Koblenz HRB 20026
WEEE-Reg.-Nr. DE85231360