Dot laser, green, 532 nm, 20 mW

DD532-20-5-F(22x80)
Order Number: 70105599

Main Parameters (*)	min	typ	max	Unit
Wavelength		532		nm
Optical Output Power		20		mW
Operating Voltage	4.5	5	5.5	V DC
Operating Current		400		mA
Operating Temperature	15		30	°C
Storage Temperature	-40		80	°C

Main Data

Warranty	1 years

Technical Parameters

Lifetime	> 5,000 h
RoHS	yes

Optical Parameters

Beam Shape	Dot
Laser Class	3B
Divergence	D - 0.5 mrad
Optics	glass lens AR coated
Beam Mode	TEM00
Laser technology	YVO4+KTP
Stability	+/- 20% @ 15-30°C
Warm up time	< 15 min

Electrical Parameters

Potential of Housing	isolated

Mechanical Parameters

Size	Ø22x80 mm
Material	aluminium
Cable length	100 mm
Weight	31 g

(*) Over the complete operating temperature range

Features

Picture

Drawing

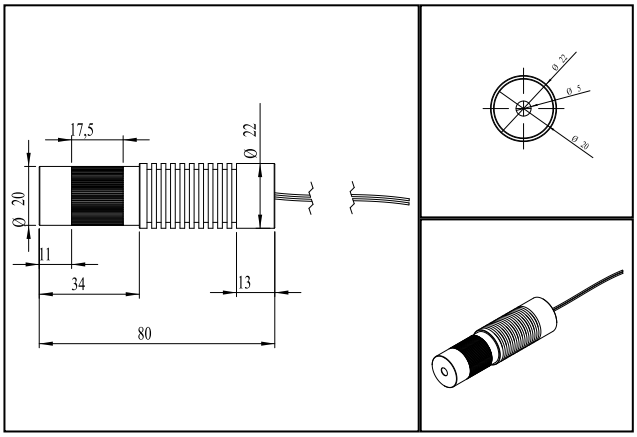

Saftey Label

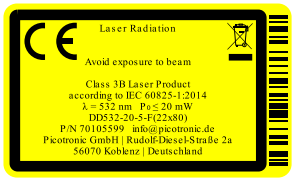

Valid Revision

3 | 14-DEC-2018

Pico Group® member

Picotronic GmbH
Rudolf-Diesel-Str. 2a
56070 Koblenz
Germany

Geschäftsführer
David Heckner

FON +49(0)261-983 497-0
FAX +49(0)261-983 497-10
www.picotronic.de
info@picotronic.de

Sparkasse Koblenz
BIC/IBAN MALADE51KOB
DE41 5705 0120 0000 2110 03

Postbank Stuttgart
BIC/IBAN PBNKDEFF
DE41 6001 0070 0077 0787 04

USt-IdNr. DE814473445
Amtsgericht Koblenz HRB 20026
WEEE-Reg.-Nr. DE85231360