Dot laser, green, 532 nm, 1 mW

DD532-1-3(20x80)
Order Number: 70100853

Main Parameters (*)	min	typ	max	Unit
Wavelength		532		nm
Optical Output Power		1		mW
Operating Voltage	2.7	3	3.3	V DC
Operating Current	100	160	300	mA
Operating Temperature	15		30	°C
Storage Temperature	-40		80	°C

Main Data

Warranty	1 years

Technical Parameters

Lifetime	> 5,000 h
RoHS	yes

Optical Parameters

Beam Shape	Dot
Laser Class	2
Divergence	D - 0.5 mrad
Beam Diameter	3.5 mm
Size of Laserdot	<4mm@10m
Operating Distance	50 m
Optics	glass lens AR coated
Beam Mode	TEM00
Laser technology	Solid State (YVO4+KTP)
Stability	+/- 20% @ 15-30°C
Focus	collimated
Warm up time	< 15 min

Electrical Parameters

Potential of Housing	isolated
Power Supply	LFNT-3

Mechanical Parameters

Size	Ø20x80 mm
Material	aluminium
Cable length	100 mm
Wire type	26AWG, 0,14mm²
Output Aperture	5 mm
Housing Color	black
Weight	55 g
Stripping of wire	5 mm

(*) Over the complete operating temperature range

Features

- Operating Voltage 3 V DC
- Laser Class 2
- Image processing
- Compact size

Picture

Cable color

Ground		blue	GND
Positive		red	2.7 - 3.3, typ 3 V DC

Drawing

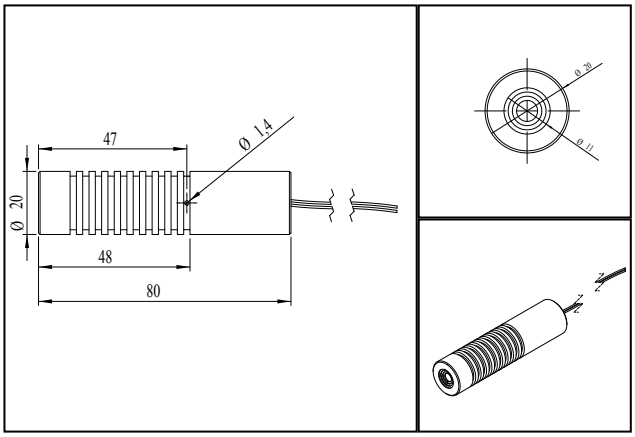

Saftey Label

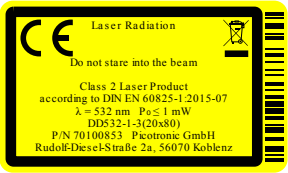

Valid Revision

1 | 26-MAR-2019

Pico Group® member

Picotronic GmbH
Rudolf-Diesel-Str. 2a
56070 Koblenz
Germany

Geschäftsführer
David Heckner

FON +49(0)261-983 497-0
FAX +49(0)261-983 497-10
www.picotronic.de
info@picotronic.de

Sparkasse Koblenz
BIC/IBAN MALADE51KOB
DE41 5705 0120 0000 2110 03

Postbank Stuttgart
BIC/IBAN PBNKDEFF
DE41 6001 0070 0077 0787 04

USt-IdNr. DE814473445
Amtsgericht Koblenz HRB 20026
WEEE-Reg.-Nr. DE85231360