Dot laser, infrared, 850 nm, 0.4 mW

DC850-0.4-4.5(14x64)
Order Number: 70102789

Main Parameters (*)	min	typ	max	Unit
Wavelength		850		nm
Optical Output Power		0.4		mW
Operating Voltage	4.05	4.5	4.95	V DC
Operating Current	5	10	15	mA
Operating Temperature	-20		50	°C
Storage Temperature	-40		80	°C

Main Data

Warranty	1 years

Technical Parameters

Lifetime	> 5,000 h
RoHS	yes

Optical Parameters

Beam Shape	Dot
Laser Class	1
Divergence	C - 0.4 mrad
Beam Diameter	3.5 mm
Size of Laserdot	<3..5mm@5m
Operating Distance	50 m
Optics	glass lens AR coated
Laser technology	Single Mode Diode
Focus	collimated

Electrical Parameters

Potential of Housing	VDD(+)

Mechanical Parameters

Size	Ø14x64 mm
Material	aluminium
Output Aperture	3 mm
Housing Color	black
Weight	21 g

(*) Over the complete operating temperature range

Features

- Operating Voltage 4.5 V DC
- Laser Class 1
- Compact size
- With battery
- Glas lenses anti reflex coated

Picture

Drawing

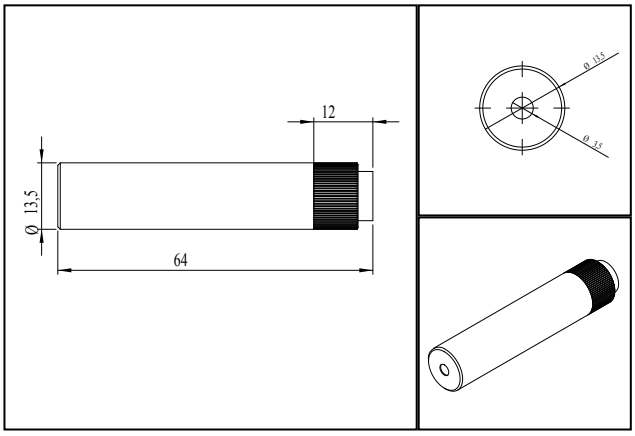

Saftey Label

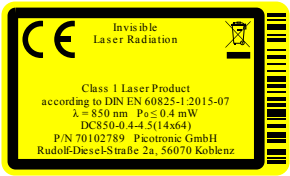

Valid Revision

5 | 15-JUL-2022

Pico Group® member

Picotronic GmbH
Rudolf-Diesel-Str. 2a
56070 Koblenz
Germany

Geschäftsführer
David Heckner

FON +49(0)261-983 497-0
FAX +49(0)261-983 497-10
www.picotronic.de
info@picotronic.de

Sparkasse Koblenz
BIC/IBAN MALADE51KOB
DE41 5705 0120 0000 2110 03

Postbank Stuttgart
BIC/IBAN PBNKDEFF
DE41 6001 0070 0077 0787 04

USt-IdNr. DE814473445
Amtsgericht Koblenz HRB 20026
WEEE-Reg.-Nr. DE85231360