Cross laser, red, 635 nm, 90 °, 5 mW

CB635-5-6(16x45)-F500-PL-C1000
Order Number: 70106763

Main Parameters (*)	min	typ	max	Unit
Wavelength		635		nm
Optical Output Power		5		mW
Operating Voltage	4.5	6	6.6	V DC
Operating Current	25	47	75	mA
Operating Temperature	-20		50	°C
Storage Temperature	-40		80	°C

Main Data

Warranty	1 years

Technical Parameters

Lifetime	> 5,000 h
RoHS	yes

Optical Parameters

Beam Shape	Cross
Laser Class	1
Divergence	B - 0.3 mrad
Fan Angle	90 °
Line Thickness	<0.5mm@0.5m
Operating Distance	0.5 m
Optics	glass lens AR coated
Laser technology	Single Mode Diode
Protection Lens	yes
Focus	fixed (500mm)
Verticality	< ± 0.5 °

Electrical Parameters

Potential of Housing	isolated
Power Supply	LFNT-6-C
Stripping of cable cover	50 mm

Mechanical Parameters

Size	Ø16x45 mm
Material	aluminium
Cable length	1,000 mm
Wire type	22AWG, black, 3,6mm
Output Aperture	6.8 mm
Housing Color	black
Weight	45 g
Stripping of wire	5 mm

(*) Over the complete operating temperature range

Features

- Compact size
- Image processing
- Low power consumption
- Uniform line thickness
- Laser Class 1

Picture

Cable color

Ground		black	GND
Positive		red	4.5 - 6.6, typ 6 V DC

Drawing

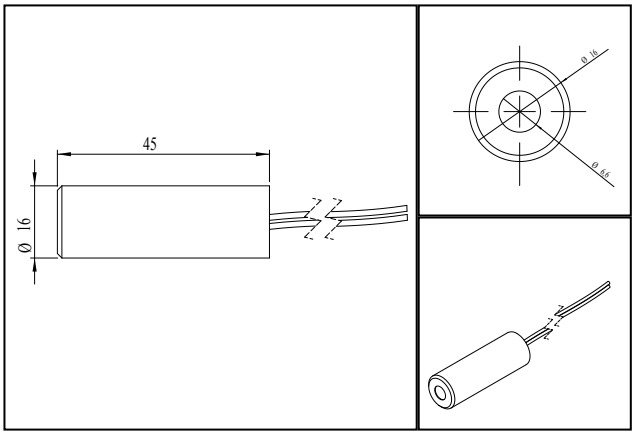

Saftey Label

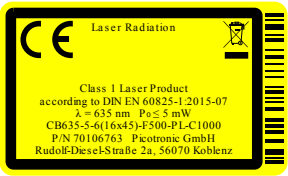

Valid Revision

1 | 21-APR-2021

Pico Group® member

Picotronic GmbH
Rudolf-Diesel-Str. 2a
56070 Koblenz
Germany

Geschäftsführer
David Heckner

FON +49(0)261-983 497-0
FAX +49(0)261-983 497-10
www.picotronic.de
info@picotronic.de

Sparkasse Koblenz
BIC/IBAN MALADE51KOB
DE41 5705 0120 0000 2110 03

Postbank Stuttgart
BIC/IBAN PBNKDEFF
DE41 6001 0070 0077 0787 04

USt-IdNr. DE814473445
Amtsgericht Koblenz HRB 20026
WEEE-Reg.-Nr. DE85231360