Doe laser, red, 635 nm, 5 °, 5 mW

DOE205-635-5-6(10x22)
Order Number: 70110715

Main Parameters (*)	min	typ	max	Unit
Wavelength		635		nm
Optical Diode Power		5		mW
Operating Voltage	3	5	6	V DC
Operating Current	25	45	65	mA
Operating Temperature	-20		50	°C
Storage Temperature	-40		80	°C

Main Data

Warranty	1 years

Technical Parameters

Lifetime	> 3,000 h
RoHS	yes

Optical Parameters

Beam Shape	DOE
Laser Class	2
Divergence	G - 0.8 mrad
Fan Angle	5 °
Operating Distance	10 m
Optics	acryl lense
Laser technology	diode
Protection Lens	yes
Focus	fixed

Electrical Parameters

Potential of Housing	VDD(+)

Mechanical Parameters

Size	Ø10x22 mm
Material	Brass
Cable length	100 mm
Wire type	26AWG, 0,14mm²
Output Aperture	6 mm
Weight	8.5 g

DOE

Alpha	5 °
a	8.5 mm
Material	PMMA

(*) Over the complete operating temperature range

Features

Picture

Cable color

Ground		black	GND
Positive		red	3 - 6, typ 5 V DC

Drawing

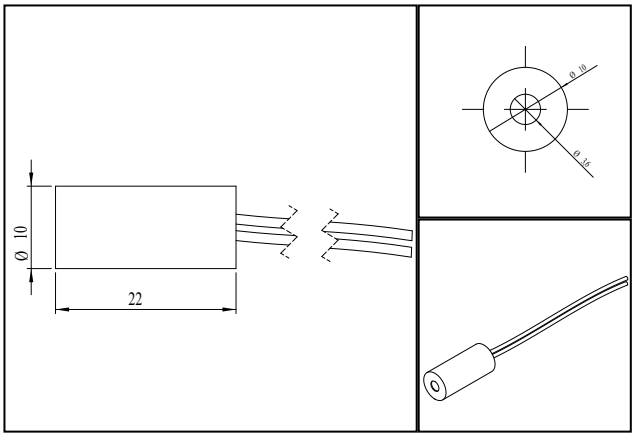

Saftey Label

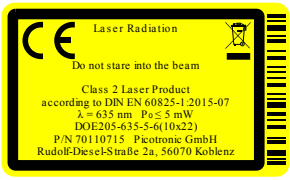

Valid Revision

17 | 08-JAN-2018

Pico Group® member

Picotronic GmbH
Rudolf-Diesel-Str. 2a
56070 Koblenz
Germany

Geschäftsführer
David Heckner

FON +49(0)261-983 497-0
FAX +49(0)261-983 497-10
www.picotronic.de
info@picotronic.de

Sparkasse Koblenz
BIC/IBAN MALADE51KOB
DE41 5705 0120 0000 2110 03

Postbank Stuttgart
BIC/IBAN PBNKDEFF
DE41 6001 0070 0077 0787 04

USt-IdNr. DE814473445
Amtsgericht Koblenz HRB 20026
WEEE-Reg.-Nr. DE85231360