## Dot laser, red, 650 nm, 16 mW

DD650-16-3(14x45)
Order Number: 70102055

| Main Parameters (*) | min | typ | max | Unit |
|---|---|---|---|---|
| Wavelength | | 650 | | nm |
| Optical Output Power | | 16 | | mW |
| Operating Voltage | 2.7 | 3 | 3.3 | V DC |
| Operating Current | 30 | 60 | 90 | mA |
| Operating Temperature | -20 | | 50 | °C |
| Storage Temperature | -40 | | 80 | °C |

### Main Data

| | |
|---|---|
| Warranty | 1 years |

### Technical Parameters

| | |
|---|---|
| Lifetime | > 5,000 h |
| RoHS | yes |

### Optical Parameters

| | |
|---|---|
| Beam Shape | Dot |
| Laser Class | 3B |
| Divergence | D - 0.5 mrad |
| Size of Laserdot | adjustable |
| Operating Distance | 50 m |
| Optics | glass lens AR coated |
| Laser technology | Single Mode Diode |
| Focus | adjustable |

### Electrical Parameters

| | |
|---|---|
| Potential of Housing | isolated |
| Power Supply | LFNT-3 |

### Mechanical Parameters

| | |
|---|---|
| Size | Ø14x45 mm |
| Material | aluminium |
| Cable length | 100 mm |
| Wire type | Belden, Typ 1007, 26AWG |
| Output Aperture | 5 mm |
| Housing Color | black |
| Weight | 16 g |
| Stripping of wire | 5 mm |

(*) Over the complete operating temperature range

### Features

- Uniform illumination
- Operating Voltage 3 V DC
- Laser Class 3B
- Compact size
- Adjustable focus

### Picture

### Cable color

| | | | |
|---|---|---|---|
| Ground | | black | GND |
| Positive | | red | 2.7 - 3.3, typ 3 V DC |

### Drawing

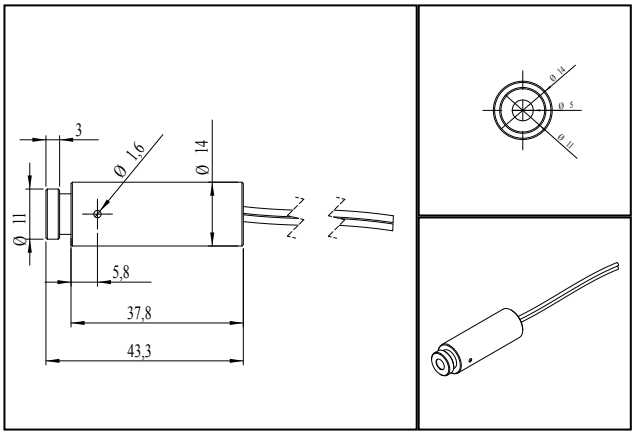


### Saftey Label

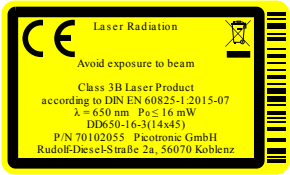


### Valid Revision

10 | 13-APR-2021

Pico Group® member

**Picotronic GmbH**
Rudolf-Diesel-Str. 2a
56070 Koblenz
Germany

**Geschäftsführer**
David Heckner

**FON** +49(0)261-983 497-0
**FAX** +49(0)261-983 497-10
www.picotronic.de
info@picotronic.de

**Sparkasse Koblenz**
**BIC/IBAN** MALADE51KOB
DE41 5705 0120 0000 2110 03

**Postbank Stuttgart**
**BIC/IBAN** PBNKDEFF
DE41 6001 0070 0077 0787 04

**USt-IdNr.** DE814473445
**Amtsgericht Koblenz** HRB 20026
**WEEE-Reg.-Nr.** DE85231360